order form

Almaden Europe GmbH

your design selection:

number of ☐ x **Terrace EVA 6***

* heavy profile necessary, cross-section: 80 x 120 mm

Date: _____

Picture: Terrace EVA 3

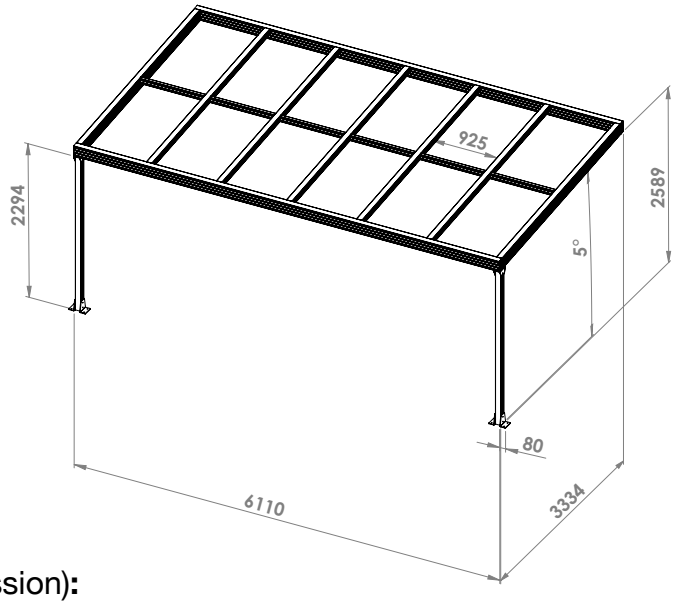

Module Selection (Information on light transmission):

Please select one of the following module types. It is sufficient to decide the degree of light transmission (in percentage). Our designs are in accordance to one of the possible module sizes.

☐ 0%

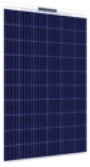

P60-w
270 Wp
(1662x990 mm)

☐ 10%

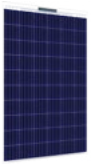

P60
265 Wp
(1652x986 mm)

☐ 11%

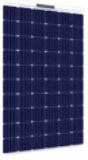

M60
280 Wp
(1662x990 mm)

☐ 26%

M50-2
220 Wp
(1662x990 mm)

☐ 40%

M40
185 Wp
(1662x990 mm)

☐ 42%

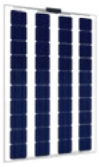

M40-2
180 Wp
(1662x990 mm)

Extension (optional):

☐ _____ m

If the selected design is too small for you, you may request an extension of the grid structure in step of approx. 1 m

Additional Material (optional):

☐ rain gutter

☐ Drain for the rain gutter

left ☐

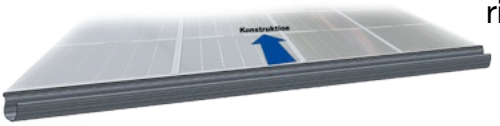

right ☐

☐ Wall connection

For direct mounting on a wall (dowels and screws for mounting on the wall are not included)

oder

☐ Extra supports for freestanding terrace

A freestanding terrace is stabilized with cross connectors on each column.

© 05/18 Almaden Europe GmbH

The place of construction is decisive for the selection of the profile thickness and the calculation of the delivery costs

Construction Area: _____

_____

☐ self pickup *(in 85757 Karlsfeld / Munich)* or ☐ delivery via forwarder

☐ **I am already a customer** **customer number:** _____

☐ **I am a new customer or do not have a customer number yet**

Name of contact person: _____

Company: _____

VAT No.: _____

Register No.: _____

Business: _____

Number of employees: _____

Address: _____

_____

Tel: _____ Mobile: _____

Mail Addres: _____

Website: _____

☐ Installer ☐ EPC ☐ Electrical retailers ☐ Building trade

☐ Reseller ☐ Projektentwickler ☐ Architect ☐ other: _____

Remarks:

☐ **I agree with the data processing by Almaden Europe GmbH.** This commitment can be revoked at any time. More about data protection at Almaden Europe GmbH can be found here.

send

please send the completed form to:
auftrag@almaden-europe.eu

© 05/18 Almaden Europe GmbH